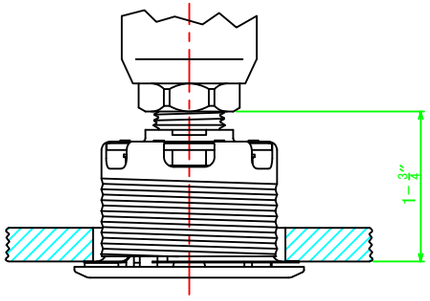

Minimum: 1 - 3/4"

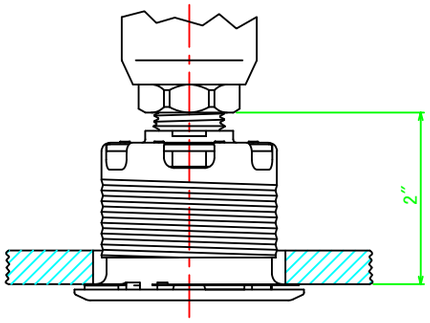

Standard Installation

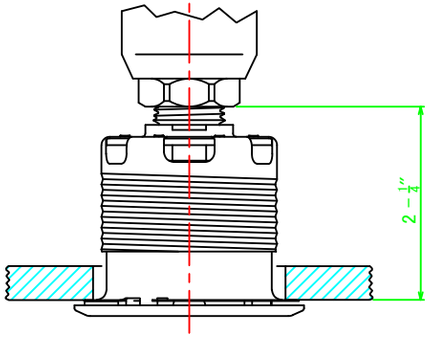

Maximum: 2 - 1/4"

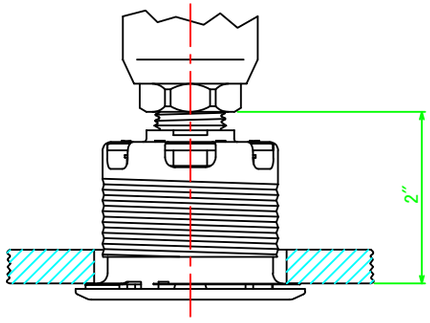

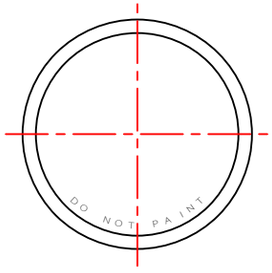

Standard Installation